Friendcom

# Friendcom Product Catalogue



Shenzhen Friendcom Technology Co., Ltd.

# COMPANY PROFILE



# ABOUT>>> FRIENDCOM

Friendcom, founded in 2002, listed in 2017, is a leading global provider of Internet of Things (IoT) products, services, and solutions.

With 600+ employees, 250+ R&D personnel, Friendcom focuses on providing comprehensive smart energy management solutions, and our communication solutions connected to 100+ million devices in 100+ countries, worldwide.

In the latest 3 years, Friendcom became the top-10 provider of AMI meter, DCU, DTU and FTU for STATE GRID of China. Total 10+ million single phase meter and 1.5+ million three phase meter were deployed.



∧ Shenzhen Headquarters



∧ Dongguan production base



∧ Wuhan Industrial Park




∧ Jiangmen Production Base



# AMI Solution Products

- SEM400 Single Phase Post Payment Meter
- SEM400 Single Phase Prepayment Meter
- TEM660 Three Phase Smart Meter
- FC2112 Data Concentrator Unit (DCU)

# SEM400-2

## Single Phase Post-payment Smart Meter




## Overview

Friendcom SEM400-2 is designed based on IEC62052-11, IEC62053-21/23 and the communication protocol comply with DLMS. It is widely used in the scenarios of residential consumption and photovoltaic power sales.

## Key Features

- Work in post-payment mode
- Import and export active & reactive energy
- Four-quadrant reactive energy
- Support over 5 tariffs
- Phase and neutral measurement
- Harmonic measurement function
- Disconnect/connect both on phase and neutral
- Support Anti-tamper function
- Infrared and RS485 communication interfaces
- Exchangeable plug-play PLC, RF and cellular communication
- Exchangeable battery
- High security (DLMS security suite 0)
- DLMS conformance

## Technical Parameters

| Parameter | Value |
|---|---|
| Connection | 1 phase 2 wire |
| Sensor (S) Numbers | 2S (Both on phase and neutral) |
| Relay ( R ) Numbers | 2R (Both on phase and neutral) |
| Rated Voltage | 230V |
| Rated Current | 5(60)A |
| Starting Current | 0.002lb |
| Frequency | 50Hz |
| Active Energy Accuracy Class | 1 |
| Reactive Energy Accuracy Class | 2 |
| Ingress Protection | IP54 |
| Power Consumption: | Voltage Circuit: 2W and 10VA |
| | Current Circuit: 4 VA |
| Two-way Communication Port | General slot |
| Dimension(L*W*H) | 302.8*158*82.8mm |

# SEM400-3

## Single Phase Prepayment Smart Meter




## Overview

Friendcom SEM400-3 is designed based on IEC62052-11, IEC62053-21/23. The prepayment function comply with STS. It is widely used in the scenarios of residential consumption and photovoltaic power sales.

## Key Features

- Work in prepayment mode
- 12 digit keypad
- Import and export active & reactive energy
- Four-quadrant reactive energy
- Support over 5 tariffs
- Phase and neutral measurement
- Harmonic measurement function
- Disconnect/connect both on phase and neutral
- Support Anti-tamper function
- Infrared and RS485 communication interfaces
- Exchangeable plug-play PLC, RF and cellular communication
- Exchangeable battery
- High security (DLMS security suite 0)
- DLMS conformance
- STS certificate

## Technical Parameters

| Parameter | Value |
|---|---|
| Connection | 1 phase 2 wire |
| Sensor (S) Numbers | 2S (Both on phase and neutral) |
| Relay ( R ) Numbers | 2R (Both on phase and neutral) |
| Rated Voltage | 230V |
| Rated Current | 5(60)A |
| Starting Current | 0.002Ib |
| Frequency | 50Hz |
| Active Energy Accuracy Class | 1 |
| Reactive Energy Accuracy Class | 2 |
| Ingress Protection | IP54 |
| Power Consumption: | Voltage Circuit: 2W and 10VA |
| | Current Circuit: 4 VA |
| Two-way Communication Port | General slot |
| Dimension(L*W*H) | 302.8*158*82.8mm |

# SEM400-4

## Single Phase Smart Meter




## Overview

Friendcom SEM400-4 is designed based on IEC62052-11, IEC62053-21/23. It is designed for residential and small commercial customers. Providing a strong foundation for your Smart Grid initiatives.

## Key Features

- Import and export active & reactive energy
- Four-quadrant reactive energy
- Support over 4 tariffs
- Phase and neutral measurement
- Harmonic measurement function
- Disconnect/connect both on phase and neutral
- Support Anti-tamper function
- Infrared and RS485 communication interfaces
- Exchangeable plug-play PLC and/or RF and cellular communication
- Exchangeable battery
- High security (DLMS security suite 0)
- DLMS conformance

## Technical Parameters

| Parameter | Value |
|---|---|
| Connection | 1 phase 2 wire, 1 phase 3 wire |
| Sensor (S) Numbers | 2S (Both on phase and neutral) |
| Relay ( R ) Numbers | 2R (Both on phase and neutral) |
| Rated Voltage | 220V/230V/240V |
| Rated Current | 5(60)A |
| Starting Current | 0.002Ib |
| Frequency | 50Hz/60Hz |
| Active Energy Accuracy Class | 1 |
| Reactive Energy Accuracy Class | 2 |
| Ingress Protection | IP54 |
| Power Consumption: | Voltage Circuit: 2W and 10VA |
| | Current Circuit: 4 VA |
| Two-way Communication Port | General slot |
| Dimension(L*W*H) | 200*130*70mm |

# TEM660

## Three Phase Smart Meter




## Overview

Friendcom TEM660 three phase smart energy meter is certificated with DLMS/COSEM, it provides an excellent and stable accuracy and performance. The plug-and-play communication module can be PLC/RF/Cellular, so the meter can be managed remotely by HES.

## Key Features

| Parameter | Value |
|---|---|
| Measurement | Import/export active, quadrant reactive energy, combined active/reactive energy |
| | Active/reactive energy in T1-T4, total energy |
| | Phase A/B/C energy, voltage, current, power, frequency etc. |
| Demand | Import/export active/reactive demand event and stamp |
| | The demand calculation supports block and sliding-window mode, the slip period is configurable |
| Tariff & TOU | 4 tariffs, support special tariff setting in holiday and weekend |
| Communication | The physical layer of the communication channel is independent of each other, and the damage of any one doesn't affect the normal operation of others (RS485 communication, Optical port, PLC, micro-power wireless, GPRS). |

## Technical Parameters

| Parameter | Value |
|---|---|
| Standard | IEC62052-11,IEC62053-21,IEC62053-23,IEC62055-31,EN50470-1,EN50470-3,IEC62058-31,BS7856,IEC62056-21,1EC62056-53 |
| voltage | 3* 230 / 400 V |
| Operating Voltage | 70%Un ~130%Un |
| Accuracy | Active: Class1,Reactive:Class 2 |
| Frequency | (50±2.5)Hz |
| Operating Temperature | -25°C~+55°C |
| Limiting Temperature | -40°C~+70°C |
| Relative Humidity | ≤95% |
| Current | 3*5(100)A |
| Start Current | 0.4%Ib |
| Creeping Current | Anti-creep design |
| Lifetime | ≥15 years |
| Dimension(L×W×H) | 300.5mm×175.0mm×92.0mm |

# TEM660-2

## Three Phase Smart Meter

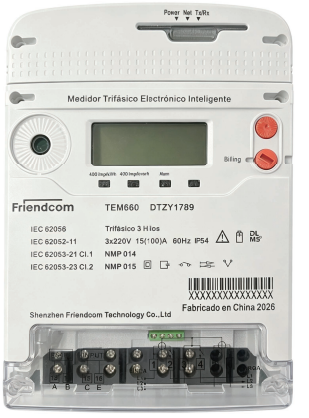


## Overview

Friendcom TEM660-2 three phase smart energy meter is certificated with DLMS/COSEM, it provides an excellent and stable accuracy and perfor-mance. The plug-and-play communication module can be PLC/RF/PLC+RF/Cellular, so the meter can be managed remotely by HES.

## Key Features

| Parameter | Value |
|---|---|
| Measurement | Import/export active, quadrant reactive energy, combined active/reactive energy |
| | Active/reactive energy in T1-T4, total energy |
| | Phase A/B/C energy, voltage, current, power, frequency etc. |
| Demand | Import/export active/reactive demand event and stamp |
| | The demand calculation supports block and sliding-window mode, the slip period is configurable |
| Tariff & TOU | 4 tariffs, support special tariff setting in holiday and weekend |
| Communication | The physical layer of the communication channel is independent of each other, and the damage of any one doesn't affect the normal operation of others (RS485 communication, Optical port, PLC, RF,PLC+RF,3G/4G). |

## Technical Parameters

| Parameter | Value |
|---|---|
| Standard | IEC62052-11,IEC62053-21,IEC62053-23,IEC62055-31,EN50470-1,EN50470-3,IEC62058-31,BS7856,IEC62056-21,1EC62056-53 |
| voltage | 3* 220 / 3*230 V |
| Operating Voltage | 70%Un ~130%Un |
| Accuracy | Active: Class1,Reactive:Class 2 |
| Frequency | (50/60±2.5)Hz |
| Operating Temperature | -25°C~+55°C |
| Limiting Temperature | -40°C~+70°C |
| Relative Humidity | ≤95% |
| Current | 3*5(100)A |
| Start Current | 0.4%Ib |
| Creeping Current | Anti-creep design |
| Lifetime | ≥15 years |
| Dimension(L×W×H) | 230mm×167mm×88mmmm |

# FC2112

## Data Concentrator Unit

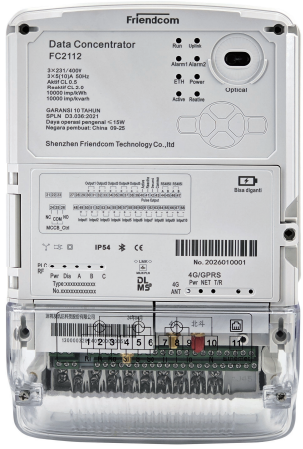


## Overview

The FC2112 Data Concentrator Unit (DCU) is a core technology within Advanced Metering Infrastructure (AMI), designed to deliver reliable, secure, and scalable data aggregation for utility operations. Acting as the central gateway between smart meters and the Head-End-System (HES), the DCU ensure seamless two-way communication, accurate data delivery, and operational efficiency.

## Key Features

- Centralized collection and aggregation data from multiple smart meters
- Secure two-way communication between smart meters and HES
- Local data buffering to ensure data continuity
- Remote configuration, monitoring, and firmware upgrades
- Comprehensive event, alarm, and operation log management
- Designed full compliance with SPLN D3.036:2021 IEC62056, IEC62052-11, IEC62053-22/23, IEC61000-4

## Technical Parameters

| Parameter | Value |
|---|---|
| Rated Voltage | 3 x 230/400 V |
| Wiring Method | Three Phase – 4 Wire |
| Rated Current | 5(10) A |
| Rated Frequency | 50 Hz |
| Accuracy Active | Energy Class 0.5<br>Reactive Energy Class 2 |
| Power Consumption | Standby Mode: ≤ 10W<br>Active Communication: ≤15 VA |
| Connector Communication | 2x5-pin IDC, 2.54mm pitch |
| Communication port: | 1 Optical port, 1 USB, 1 Bluetooth,1Ethernet,2RS485 |
| Uplink Communication: | 3G/4G |
| HPLC channel (Downlink communication) | |
| Frequency range | 0.2 – 12 MHz |
| Operating Band / Modulation | 0.781 – 2.930 MHz / OFDM |
| Data Rate / Power Density | 93/205 Kbps / ≤-45 dBm/Hz |
| Anti Attenuation | 20dBμV |
| RF channel (Downlink communication) | |
| Frequency range | 920–923 MHz |
| Modulation / Data Rate | OFDM / 29.3- 375 kbps |
| Max. Transmit Power | 24 dBm |
| Receiver Sensitivity | Up to-115 dBm@29.3kbps |



# LV & MV Distribution Products

- FC-D31 Distribution Terminal Unit (DTU)
- FC-FX3100L Load Switch Controller
- FC-FX3100  Feeder Terminal Unit (FTU)
- FC-5321 Intelligent Low-voltage Line Terminal Unit (LTU)
- FC-W6000 Remote Terminal Unit (RTU)
- FC2171 Intelligent Fusion Terminal (IFT)
- FC-5697 Intelligent SubstationVisualized Gateway
- FC-W620 Microgrid Coordination Control Device
- FC-5124 Intelligent Circuit Breaker

# FC-D31

## Distribution Terminal Unit (DTU)




## Overview

The distribution terminal unit (DTU) is installed in distribution rooms, switchgear stations, and ring main units below 38 kV, offering functions such as local monitoring, remote control, fault handling, and data transmission. By comprehensively monitoring the operational status of primary ring main units and distribution lines, the DTU enables rapid fault resolution, fault isolation, fault location identification, and power restoration. In collaboration with the distribution HES, it achieves closed-loop control, significantly enhancing the reliability and operational efficiency of distribution systems.

## Key Features

- Standardized design with module-level replaceability ensures safe, reliable operation and scalability, fully compliant with typical design standards.
- Platform-based hardware tailored for edge-computing architectures, featuring a cooperative real-time core and management core.
- A dedicated security chip with embedded encryption algorithms guarantees the integrity, confidentiality, and availability of data exchanges.
- Low-power design: total terminal power consumption does not exceed 30 VA.
- Industrial-grade product with wide temperature tolerance, resistant to magnetic interference, shock, moisture, and lightning.
- Comprehensive interfaces: 2 Ethernet ports and multiple RS-232/485 ports, supporting mainstream communication protocols such as IEC 60870-5-101/104, IEC 61850, and DNP3.0.

# Technical Parameters

| Parameter | | Value |
|---|---|---|
| Work environment | Temperature | -40℃～+70℃ |
| | Relative humidity | 10% to 100%, no condensation |
| Rated voltage | | AC100/√3V |
| Zero-sequence voltage | | AC100V |
| Frequency | | 50Hz |
| Power consumption | | ≤30VA |
| Rated current | | 1A or 5A |
| Zero-sequence current | | 1A |
| Remote signal power supply | | DC24V |
| Switch measurement and control capacity | | 1. Capacity configuration: Number of circuits determined by the actual number of switch bays.<br>2. Telemetry: Measures three-phase voltage and zero-sequence voltage per unit, and three-phase current and zero-sequence current per circuit.<br>3. Remote signaling: Six status points per circuit: breaker closed, breaker open, earthing switch position, spring charged status, remote/local status, and control circuit failure.<br>4. Remote control: Trip and close control outputs provided for each circuit. |
| Accuracy of measurement | Voltage, Current | Level 0.5 |
| | Active power, reactive power | Level 1 |
| | Frequency | ±0.02 Hz |
| Remote signaling | Stabilization time | 20 ms (adjustable from 10 ms to 6000 ms) |
| | SOE resolution ratio | 5ms |
| CI | | 3 RS485 interfaces, 1 RS232 interface, and more than 2 Ethernet interfaces |
| Communicating protocol | | Supports mainstream communication protocols such as IEC60870-5-101/104, IEC61850, and DNP3.0 |
| Clock precision | | ≤2s/d |
| IP rating | | IP54 |
| MTBF | | ≥50000h |
| Life length | | ≥10 years |

# FC-FX3100

## Feeder Terminal Unit (FTU)



## Overview

Designed for distribution lines up to 38 kV, the feeder terminal unit (FTU) can be used on load switches, circuit breakers, and reclosing devices, integrating fault protection, power measurement, status monitoring, feeder automation, and fault recording into a single solution to meet the distributed control and operation maintenance requirements of smart distribution networks.

## Key Features

- Highly integrated functionality: Beyond conventional protection, the device supports advanced distribution functions including over/under-frequency protection, over/under-voltage protection, voltage vector shift detection, synchronization check, cold-load pickup protection, live-line work interlocking, breaker life prediction, reverse power protection, and broken-line protection.
- Strong environmental adaptability: Operating temperature −40°C to +70°C, suitable for altitudes up to 3,000 m. The enclosure meets IP65, (optional cooling components can achieve IP54) while maintaining dustproof, waterproof, heat-resistant, and corrosion-resistant performance.
- Flexible disturbance recording start conditions: Recording can be triggered by overcurrent, earth fault, voltage loss, reclosing, current surge, and other events. Each record includes 4 pre-fault cycles and 8 post-fault cycles for detailed analysis.
- Optimized wiring design: Uses aviation-style integrated terminals with clearly separated zones for power, control, analog signals, and Ethernet, ensuring neat wiring and easy installation.
- Excellent mechanical and electrical performance: Relays offer high output capacity, adjustable pulse width, and long mechanical life, and meet IEC requirements for vibration, shock, impact, and comprehensive EMC immunity.
- Comprehensive O&M functions: Supports online/offline setting configuration, project backup and recovery, message analysis, logic monitoring, and remote firmware upgrades, and is compatible with smart substation and distribution automation O&M systems.

# Technical Parameters

| Parameter | | Value |
|---|---|---|
| Working temperature limit | | -40°C to +70°C, with a maximum temperature change rate of 1°C/min |
| Rated parameter | Accessory power supply | AC220V, voltage allowable deviation ±20% |
| | Switching and status quantity input voltage | DC 24V |
| AC circuit parameters | Secondary PT rated phase voltage | 3.25/√3V, voltage error <0.2%, phase difference <10′, overload voltage 20V |
| | Secondary CT rated phase current | 1A (5A): Current error <0.1%, phase difference <5′, short-term tolerance to 20 times rated current for 1 second |
| Accuracy of measurement | Voltage measurement | 0.01–1.2 Un, accuracy ≤ ±0.2% |
| | Electric current measurement | 0.01–1.2 In, accuracy ≤ ±0.2% |
| | Power and power factor | The accuracy of active and reactive power is ≤±0.5%; the accuracy of power factor is ≤±1% or ±0.01%. |
| | Frequency measurement | 45Hz~65Hz, accuracy ≤±0.01Hz |
| | DC voltage measurement | 0V~30V, accuracy ≤±0.5% |
| Event resolution | | ≤1ms |
| Communication protocol | | IEC 60870-101, IEC 60870-104, IEC 61850, DNP 3.0 |
| Power supply specifications | | DC24V lead-acid battery |
| Protection grade | | IP65 |

# FC-FX3100L

## Load Switch Controller



## Overview

Designed for distribution systems up to 38 kV, this device is primarily used for fault diagnosis and isolation of load switches, power restoration, switch control, energy measurement, and status monitoring. It features integrated capabilities in protection, measurement, control, and communication.

## Key Features

- Comprehensive protection functions: It provides three-stage overcurrent/inverse-time overcurrent, three-stage zero-sequence overcurrent/inverse-time zero-sequence overcurrent, negative-sequence overcurrent, overvoltage, sensitive earth-fault, underload, current imbalance, and sectionalizer-mode protection. Optional functions include second harmonic distortion (SHD) protection, complex voltage protection, and directional blocking protection.
- Integrated measurement, control, and disturbance recording: High-precision acquisition of three-phase current, voltage, power, frequency, and energy. Supports daily and time-tagged energy freezing. Fault recording complies with the COMTRADE standard, with 128 samples per cycle and storage for up to 256 disturbance records.
- Comprehensive event logging: Millisecond time-stamped records support up to 2,048/1,024 remote-signal events, fault events, and operation events, enabling detailed fault tracing and operational analysis.
- High-reliability design: Unified hardware architecture with fewer board types and simplified spare-part management; employs isolation and shielding with SMT manufacturing, and passes stringent vibration, shock, and EMC tests.

## Technical Parameters

| Parameter | | Value |
|---|---|---|
| Enviromental parameter | Work temperature limit | -40°C to +70°C, maximum rate of change 1°C/min |
| | Relative humidity | 10% to 95%, no condensation |
| Key technical performance indicators Rated parameter | Accessory power supply | AC 85~264V |
| | Switching and status quantity input voltage | DC 24V |
| | Voltage and current measurement accuracy | Class 0.5 |
| | Measurement accuracy of power and power factor | Class 1 |
| | Frequency measurement accuracy | ±0.02Hz |
| | Event Resolution | ≤1ms |
| Standby power supply | Power supply specifications | DC24V lead-acid battery |
| Communication Protocol | | IEC60870-5-101/104, IEC61850, and DNP 3.0 |
| IP rating | | IP54 |
| MTBF | | ≥50000h |
| Life length | | ≥10 years |

# FC-5321

## Intelligent Low-voltage Line Terminal Unit (LTU)




## Overview

The FC-5321 intelligent low-voltage line terminal unit (LTU) is primarily installed on 0.4kV lines at low-voltage outgoing cables, distribution branch boxes, overhead lines, meter boxes, and distribution boxes. As a critical sensing device at the end of modern smart distribution substation systems, it enables real-time monitoring of voltage, current, and power at all branch points, detects line short-circuit and grounding faults promptly, and supports advanced functions such as automatic substation line topology identification and line loss analysis.

## Key Features

- Equipped with a high-performance 32-bit ARM microprocessor for real-time signal processing and data acquisition.
- Protective current transformer signals and metering current transformer signals are separately collected.
- Calculates line phase voltage, phase metering current, phase active power, phase reactive power, temperature, and phase protection current.
- Provides fault indication using the fundamental component of the protection current as the detection input; indication remains latched until the fault is cleared.
- Supports pressure status monitoring (pressure / loss of pressure).
- Enables advanced functions such as automatic topology identification and line loss analysis.

## Technical Parameters

| Parameter | | Value |
|---|---|---|
| Work environment | Temperature | -40℃～+70℃ |
| | Relative humidity | 10% to 100%, no condensation |
| Power parameter | Rated voltage | AC3X220V |
| | Frequency | 50Hz |
| | Power consumption | ＜10VA |
| Measurement accuracy | Voltage, current, active Power | Class 0.5S |
| | Reactive power | Class 1 |
| | Frequency | ±0.01 Hz |
| Communicating protocol | | Supports protocols such as IEC60870-5-101, DL/T645, Q/GDW11778, and Modbus, as well as protocol extensions. |
| Clock precision | | ≤0.5s/d |
| Local communication | | PLC+RF, external module |
| Dimensions (L×W×H) | | 190mm×65mm×75.5mm |
| MTBF | | ≥50000h |
| IP grade | | IP51 |
| Life length | | ≥10 years |

# FC-W6000

## Remote Terminal Unit （RTU）



## Overview

This device is suitable for distribution lines from 6.6 kV up to 38 kV and below. It supports optional electromagnetic or electronic CT/VTs and integrates remote measurement, remote signaling, remote control, protection, and data forwarding functions. It enables fault isolation on distribution feeders and supports feeder automation and self-healing, serving as a new-generation microprocessor-based remote terminal unit for distribution automation.

## Key Features

- Superior performance: It uses advanced digital signal processing, high-speed industrial networking, and an embedded platform for stable operation, high real-time performance, and wide temperature tolerance, while supporting user-defined extended protection and control logic.
- Modular hardware: Board-based architecture with multiple Ethernet ports and multi-channel RS-485/RS-232 serial interfaces; supports up to 48 digital inputs and 20 relay outputs with flexible interface configuration.
- Comprehensive protection: It provides three-stage overcurrent, inverse-time overcurrent, three-stage zero-sequence overcurrent, voltage protection, post-acceleration, multi-shot reclosing, and other functions, compatible with IEC and IEEE standard inverse-time characteristic curves.
- Powerful communications: Dual Ethernet ports and four switchable RS-485/RS-232 serial ports, supporting IEC 60870-5-101/104 and DNP3.0, and enabling device cascading, remote firmware upgrade, and settings modification.
- Robust safety and EMC: Designed in strict accordance with power-industry safety standards, with comprehensive grounding, ESD, and surge protection. Insulation, dielectric strength, impulse withstand, and damp-heat performance meet industrial requirements, with high electromagnetic immunity.

# Technical Parameters

| Parameter | Value |
|---|---|
| AC voltage loop | Electronic type: 3.25V/100V (input/display);<br>Electromagnetic type: 100/√3V, 100V |
| AC current Loop | Electronic type: 0.225V/1A (input/display);<br>Electromagnetic type: 5A/1A |
| DC sampling voltage | DC0V~DC60.0V |
| Rated frequency | 50Hz, 60Hz |
| Overall power consumption | DC power supply ≤10W |
| Sampling measurement range | Voltage: 10V~250V; Current: 0.005A~20A (rated: 1A) |
| Voltage and current measurement accuracy | Class 0.2 |
| Power measurement accuracy | Class 1 |
| Frequency measurement error | ≤0.005Hz |
| SOE event resolution | ≤1ms |
| 24h clock self-walking error | ＜2s |
| Number of DO Circuits | 10 channels per board, maximum: 20 channels |
| Number of DI Circuits | 16 channels/board, maximum 48 channels |
| Work temperature | -40℃~+70℃ |
| DC supply voltage | Nominal: 24V, input range: 21V~29V |

# FC2171

## Intelligent Fusion Terminal (IFT)




## Overview

The FC2171 intelligent fusion terminal (IFT) functions as an edge IoT gateway for low-voltage distribution zones, following the principle of "one terminal per power distribution zone, one channel per key." Taking the distribution zone as the smallest management unit, it deeply integrates distributed edge computing and IoT communication technologies to provide comprehensive, real-time monitoring and measurement of low-voltage distribution zones, forming an integrated management and control system centered on smart distribution zone terminals.

By strengthening business integration, the device enables full-status monitoring of distribution equipment and end-to-end visibility of operational processes, making distribution network operation and information processing online, transparent, mobile, and intelligent. This significantly enhances medium- and low-voltage fault diagnosis capabilities, improves fault repair efficiency, increases power supply reliability, and raises overall customer service quality.

## Key Features

- Industrial-grade multi-core processor running at 1.2 GHz provides strong computing performance.
- Decoupled hardware–software architecture with edge-computing support; application software is delivered as apps, enabling flexible function customization.
- High-capacity storage design ensures fast, secure handling of large data volumes.
- Industrial-grade wide-range power supply, suitable for harsh environments featuring high temperature, high voltage, high salinity, and strong electromagnetic fields.
- Supports minute-level data collection with a single-scan success rate above 99.5%.
- Supports data acquisition in large distribution zones, able to handle up to 2,048 electricity meters.
- Compatible with multiple standard functional modules to support comprehensive application scenarios.

# Technical Parameters

| Parameter | | Value |
|---|---|---|
| Work environment | Temperature | -40℃～+70℃ |
| | Relative humidity | 10% to 100%, no condensation |
| Power parameter | Rated voltage | AC3X220V/380V |
| | Frequency | 50Hz |
| | Power consumption | ≤15W |
| Measurement accuracy | Voltage, current, active power, etc. | Class: 0.5S |
| | Reactive power | Class 1 |
| | Frequency | ±0.01 Hz |
| Remote signaling | Stabilization time | 20 ms (adjustable from 10 ms to 6000 ms) |
| | Resolution ratio | 5ms |
| CI | | 1 Bluetooth port, 2 RS-485 communication interfaces, 1 remote communication interface |
| Communicating protocol | | Supports protocols such as IEC60870-5-101, IEC60870-5-104, MQTT, DL/T645, Q/GDW11778, Modbus, and DL/T842, as well as protocol extensions. |
| Clock precision | | ≤0.5s/d |
| Data storage capacity | | ≥16GB |
| MTBF | | ≥50000h |
| Dimensions (L×W×H) | | 290mm×180mm×95mm |
| IP grade of protection | | IP51 |
| Life length | | ≥10 years |

# FC-5697

## Intelligent Substation Visualized Gateway




## Overview

The FC-5697 Intelligent Substation Visualized Gateway acts as the “sensory system” in distribution substation monitoring and as an edge node in the IoT “cloud–pipe–edge–end” architecture. With a platform-based hardware design, software-defined functions, modular structure, hardware–software decoupling, and adaptive communication protocols, it supports high-concurrency processing, large-capacity storage, multi-source data acquisition, and AI-enabled analytics.

By integrating AI analysis, edge computing, and IoT communication, the gateway connects sensors, control devices, and video modules, performs protocol conversion across heterogeneous sensing networks, and enables real-time monitoring of environmental conditions, equipment status, disaster events, and video streams. It is mainly deployed in substations, switchgear stations, ring main units, distribution rooms, server rooms, base stations, and warehouses.

## Key Features

- Industrial-grade multi-core processor running at 2.4 GHz provides strong computing performance.
- Decoupled hardware–software architecture with edge-computing support; application software is delivered as apps, enabling flexible function customization.
- High-capacity storage design ensures fast and secure handling of large data volumes.
- Industrial-grade wide-range power supply suitable for harsh environments with high temperature, high voltage, high salinity, and strong electromagnetic fields.
- Supports customized linkage/control strategies tailored to on-site requirements.
- Supports multiple communication methods, including RS-485 and LoRa, for deployment in complex field scenarios.

# Technical Parameters

| Parameter | | Value |
|---|---|---|
| Work environment | Temperature | -40℃～+70℃ |
| | Relative humidity | 10% to 100%, no condensation |
| Power parameter | Rated voltage | AC220V±20%50Hz//DC24V |
| | Power consumption | ≤30W |
| Port configuration | RS485 | Route 6 |
| | RS232 | Route 1 |
| | USB | Route 3 |
| | SATA interface | Route 1 |
| | LoRa | Route 2 |
| | Bluetooth interface | Route 1 |
| | Ethernet interface | Route 8 |
| | Public network wireless | 2G 4G |
| | Radio frequency wireless | 4 channels (2 LoRa 470 MHz channels and 2 LoRa 2.4 GHz channels) |
| | Remote signaling | Route 4 |
| | Remote control | Route 4 |
| Hardware performance | CPU basic frequency | An 8-core 64-bit CPU with a clock speed of 2.4 GHz |
| | Internal storage | 8GB |
| | SC | 2TB |
| | Artificial Intelligence computing power | ≥6Tops |
| | Exceptional scenario Identification accuracy | ≥95% |
| | Video frame handling time | ≤0.2 seconds |
| Communicating protocol | Remote communication protocol | Supports protocols such as MQTT and DL/T634.5104 |
| | Local communication protocol | Supports IoT low-power wireless communication protocols for power transmission and transformation equipment, IoT sensor data specifications for power transmission and transformation equipment, Modbus protocol, GB28181, or RTSP. |
| MTBF | | 5000 |

# FC-W620

## Microgrid Coordination Control Device




## Overview

The FC-W620 microgrid coordination control device is an intelligent controller for microgrid, distributed generation, and energy storage systems. It can be integrated with photovoltaic arrays, wind turbines, energy storage units, and charging stations. By collecting and analyzing microgrid data, it monitors the operating status and health of PV, wind, storage, and charging equipment, and performs real-time dynamic control of distributed generation, storage, and loads. This supports local integration of renewables, enhances grid stability, and mitigates load fluctuations. The device enables effective demand management, improves microgrid efficiency, reduces power supply costs, and ensures safe, reliable, and economical microgrid operation.

## Key Features

- Modular design: Plug-and-play modular architecture with high scalability, allowing configurations tailored to site requirements.
- Data acquisition: Supports multi-channel real-time communication via serial ports, Ethernet, and other interfaces, integrating with diverse PV inverters, wind turbines, energy storage systems, diesel generators, and related equipment.
- Edge computing: Provides flexible alarm thresholds, proactive alarm reporting, data aggregation and calculation, logic control, breakpoint resume, data encryption, and 4G routing.
- Policy management: Supports anti-backflow control, scheduling curves, peak shaving and valley filling, demand control, active/reactive power control, and PV–storage coordination, with fully customizable strategies.
- System security: User permissions follow a zero-trust model to block unauthorized access; combined with data encryption, integrity verification, calibration, and anti-tamper mechanisms, ensuring data integrity and traceability.
- Operational safety: Collects and analyzes comprehensive site signals and measurements—including battery status, temperature control, and fire protection—to enable early warning and predictive safety analysis.
- Local monitoring: Built-in LCD panel enables on-site status viewing and control..

# Technical Parameters

| Parameter | | Value |
|---|---|---|
| Work environment | Temperature | --40℃～+70℃ |
| | Relative humidity | 10% to 100%, no condensation |
| Power parameter | Rated voltage | AC220V/DC220V/DC110V |
| | Frequency | 50Hz |
| | Power consumption | ＜10W |
| Measurement accuracy | Voltage, current, active power | 0.5S class |
| | Reactive power | Level 1 |
| | Frequency | ±0.01 Hz |
| Remote signaling | Stabilization time | 20 ms (adjustable from 10 ms to 6000 ms) |
| | Resolution ratio | 2ms |
| Remote control accuracy rate | | 100% |
| Communicating protocol | | Supports protocols such as Modbus RT/TP, DL/T645, IEC 61850, IEC 60870-5-101, IEC 60870-5-104, SNMP, and MQTT. |
| Clock precision | | ≤0.5s/d |
| Dimensions (L×W×H) | | 190mm×65mm×75.5mm |
| MTBF | | ≥50000h |
| IP grade | | IP51 |
| Life length | | ≥10 years |

# FC-5124

## Intelligent Circuit Breaker



## Overview

The FC-5124 intelligent circuit breaker has a rated insulation voltage of 2.5 kV and is intended for three-phase, four-wire TT distribution systems (neutral directly grounded) operating at 50 Hz, with a rated voltage of 380 V and rated current from 125 A to 630 A. It provides indirect contact protection against fire hazards caused by earth-fault currents due to insulation failure, while also performing power distribution and protection against line overload and short circuits. In addition, it offers protection against line overvoltage, undervoltage, and phase loss.

## Key Features

- Equipped with a high-performance 32-bit ARM microprocessor for real-time signal processing and intelligent control.
- Provides residual current (leakage) protection with automatic reclosing.
- Continuously monitors and tracks line residual current, with automatic threshold adjustment to ensure high operating reliability.
- Offers three-stage protection (long-time, short-time, and instantaneous) with electronic tripping independent of supply voltage.
- High breaking capacity ensures dependable short-circuit protection.
- Identifies and displays trip causes (residual current, overcurrent, overload, undervoltage, overvoltage, phase loss) and supports event storage, query, and deletion.
- Supports advanced functions such as automatic topology identification and line loss analysis.
- Local communication module supports external pluggable expansion.

## Technical Parameters

| Parameter | | Value |
|---|---|---|
| Shell frame current (A) | | 125/250/400/630 |
| Polar number | | 3P+N/3P |
| Power parameter | Rated voltage | AC3X220V//380V |
| | Frequency | 50Hz |
| | Power consumption | ＜10VA |
| Measurement accuracy | Voltage, current, active power | Class 0.5S |
| | Reactive power | Class 1 |
| | Frequency | ±0.01 Hz |
| Automatic reclosing time | | 20-60s |
| Communicating protocol | | Supports protocols such as IEC60870-5-101, DL/T645, Q/GDW11778, and Modbus, as well as protocol extensions. |
| Clock precision | | ≤0.5s/d |
| Local communication | | HPLC+RF, external module |
| MTBF | | ≥50000h |
| IP grade | | IP51 |
| Life length | | ≥10 years |

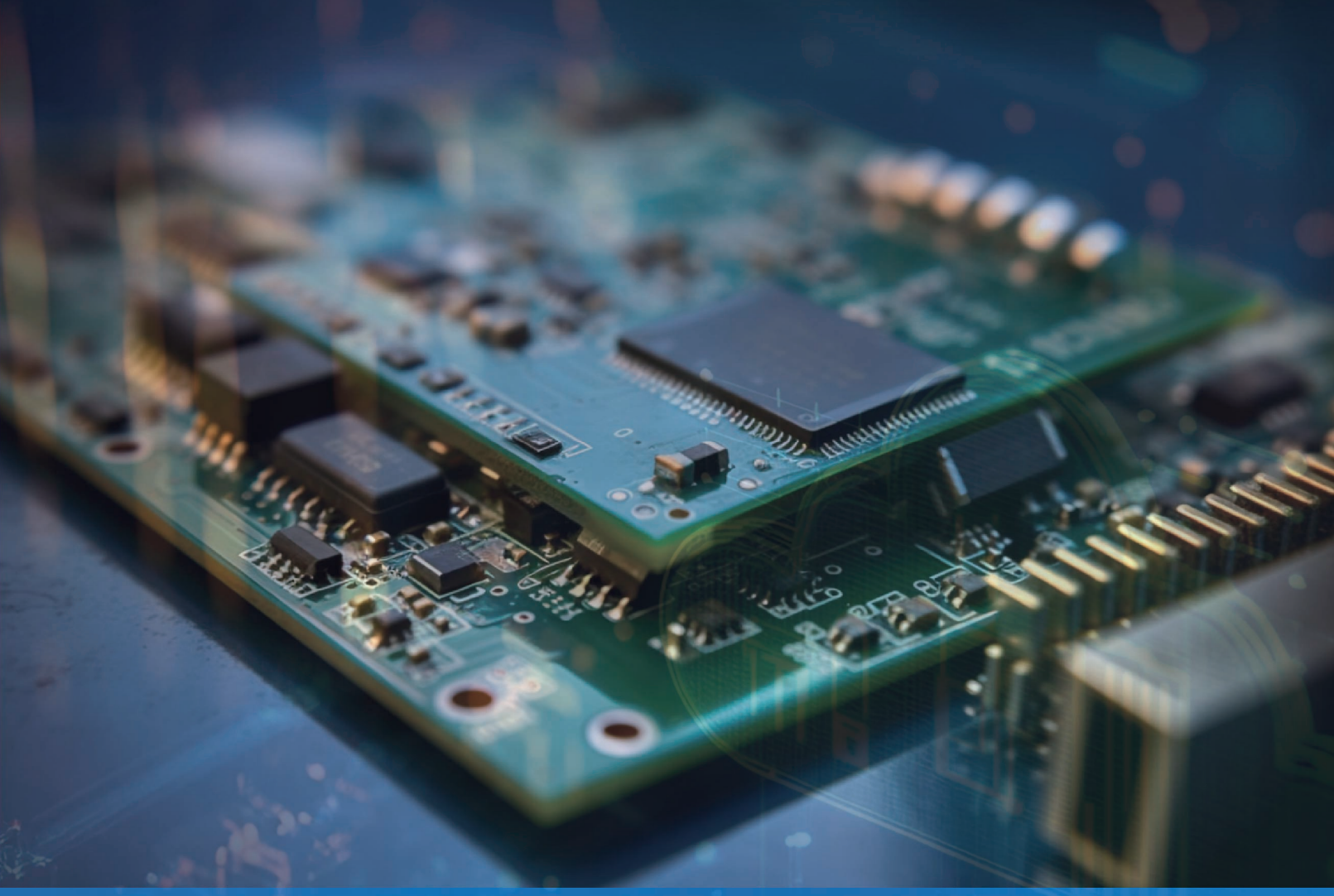

# Communication Modules

- WSN27-915R Wi-SUN Router Module
- FC-2601B HPLC+HRF Hybrid Module
- WMB14-868LR Hybrid Module(Wireless M-Bus + LoRaWAN)
- WMB14-433LR Hybrid Module(Wireless M-Bus + LoRaWAN)
- WMB14-868 Wireless M-Bus Module
- WMB14-433 Wireless M-Bus Module
- WSL05-868/915MHz LoRaWAN Module
- WSL05-433/470MHz LoRaWAN Module
- PULSE915-LRW
- PANACEA Meter Collector

# WSN27-915R

## Wi-SUN Router Module

### Features

- UART TTL interface
- AT command
- 24 x 18 x 3mm

### Supported Frequency Band

- Frequency Band:433, 490, 868, 915 MHz
- Output Power: Up to 27 dBm
- Power Supply: 3.3V
- Data Rate: 50-300Kbs
- Sensitivity ( CER < $10^{-3}$ ):-108 dBm ( 50 kbps )

### STANDARDS

- Wi-SUN FAN cerficated,WSA0294.




WSN27-915R

# FC-2601B

## HPLC+HRF Hybrid Module

### Features

- Phase recognition
- Hybrid mode communication
- High speed

### HPLC Characteristics

- Frequency Band: 0.7-12MHz
- Modulation: OFDM

### RF Characteristics

- Frequency Band: Customized Sub-1GHz
- Max Data Rate: 1000kbps
- Tx Power: <50mW
- Rx Sensitivity:-109dBm

### Standards

- IEEE 802.15.4g
- IEEE P1901.3




FC-2601B

# WMB14-868LR

## Hybrid Module(Wireless M-Bus + LoRaWAN)

### Features

- UART TTL interface
- 2.2V- 3.6V power supply
- Ultra low Power consumption <2μA@25°C
- 25.5 x 14.2 x 3.75mm

### Supported Frequency Band

- 868.3 MHz-869.525 MHz
- EU868, US915, AU915, IN865, AS923, KR920, RU864

### Security

- AES128 data encryption

### STANDARDS

- Conforms to EU Radio Equipment Directive (RED) 2014/53/EU
- Complies with EN 13757- 4 & OMS




WMB14-868LR

# WMB14-433LR

## Hybrid Module(Wireless M-Bus + LoRaWAN)

### Features

- UART TTL interface
- 2.2V- 3.6V power supply
- Ultra low Power consumption <2μA@25°C
- 25.5 x 14.2 x 3.75mm

### Supported Frequency Band

- 433.5 MHz-434.475 MHz
- EU433

### Security

- AES128 data encryption

### Standards

- Conforms to EU Radio Equipment Directive (RED) 2014/53/EU
- Complies with EN 13757- 4 & OMS




WMB14-433LR

# WMB14-868

## Wireless M-Bus Module

### Features

- UART TTL interface
- 2.2V- 3.6V power supply
- Ultra low Power consumption <2μA@25°C
- 25.5×14.2×3.75mm

### Supported Frequency Band

- 868.3MHz–869.525MHz

### Security

- AES128 data encryption

### Standards

- Conforms to EU Radio Equipment Directive (RED) 2014/53/EU
- Complies with EN 13757- 4 & OMS




WMB14-868

# WMB14-433

## Wireless M-Bus Module

### Features

- UART TTL interface
- 2.2V- 3.6V power supply
- Ultra low Power consumption <2μA@25°C
- 25.5×14.2×3.75mm

### Supported Frequency Band

- 433.5 MHz-434.475 MHz

### Security

- AES128 data encryption

### Standards

- Conforms to EU Radio Equipment Directive (RED) 2014/53/EU
- Complies with EN 13757- 4 & OMS




WMB14-433

LoRaWAN

# WSL05-868/915MHz
## LoRaWAN Module

### Features
- UART TTL interface
- Power Supply: 2.4 to 3.6 V
- Ultra low Power consumption <2μA@25°C
- 22.2×14.2×3.2mm

### Supported Frequency Band
- Eu868, US915, AU915, IN865, AS923, KR920,RU864

### Security
- AES128 data encryption

### Standards
- Conform with RED & FCC requirements

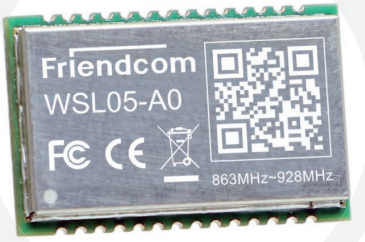


WSL05-868/915MHz

# WSL05-433/470MHz
## LoRaWAN Module

### Features
- UART TTL interface
- Power Supply: 2.4 to 3.6 V
- Ultra low Power consumption <2μA@25°C
- 22.2×14.2×3.2mm

### Supported Frequency Band
- Eu433

### Security
- AES128 data encryption

### Standards
- Conform with RED & FCC requirements




WSL05-433/470MHz

# FC-714
## PULSE915-LRW







## Product Description

This product is primarily used for pulse collection from water and gas meters. It supports two sampling modes—passive pulse (reed switch) and active pulse (Hall sensor)—as well as both single-pulse and dual-pulse input configurations. Equipped with a LoRaWAN module, it enables active data transmission. The device offers easy deployment, high reliability, low power consumption, long communication range, and extended service life.

## Key Features

- Long-range wireless data transmission
- Supports active (Hall) and passive (reed switch) pulse sensors
- Multi-band operation: EU433, CN470, EU868, US915, AU915, IN865, etc.
- Configurable reporting interval
- Built-in antenna and pre-installed long-life battery
- Configuration via UART serial port or over-the-air
- Firmware upgrade via UART or FOTA
- Battery level monitoring with optional automatic power status reporting
- Typical service life of up to 10 years*
- IP67-rated waterproof enclosure

  * Actual lifetime depends on installation environment and reporting interval.

## Technical Parameters

| Item | Parameter |
|---|---|
| Dimension | 50mm (L) x 45.5mm(W) x 134 mm (H) |
| Weight | 146g (Contains the weight of 1 meter long cable) |
| Cable length | 1m |
| Communication range | Up to 15km (In visibility conditions) |
| Radio Characteristics | Tx Power: Max. 20dBm Rx Sensitivity: < -138dBm |
| Power Consumption | <8 μA@ Standby mode |
| MAC Layer | LoRaWAN ® |
| Operating Temperature | -40°C to +70°C (Industrial Grade) |
| Operating humidity | 5%RH to 95%RH |
| Antenna Option | Build-in Antenna |
| Power Supply | Pre-installed long-life battery, 2.6V to 3.7V |
| Configuration | UART serial port or over-the-air |
| Environmental Compliance | RoHS, REACH |
| Certification | CE, FCC, LoRa Alliance*, ANATEL |

# PANACEA
## Meter Collector




## Overview

The FC-777 PANACEA Collector is a modular IoT data acquisition terminal designed for non-invasive retrofitting of traditional mechanical water/gas meters. It features replaceable communication modules and batteries, addressing challenges such as difficult retrofitting and high maintenance costs, while providing a future-proof data collection solution for water and gas industries.

## Key Features

- Modular Design, Future-Proof

  Hot-pluggable communication modules (NB-IoT / LoRaWan / WMbus / Wi-SUN / 4G Cat.1) adapt to network evolution, extending product lifecycle and protecting customer investments.

- Long Battery Life, Easy Maintenance

  User-replaceable lithium-thionyl chloride battery supports external battery expansion packs, reducing maintenance costs while ensuring ultra-long operation.

- Versatile Compatibility

  Compatible with various sensor heads (image recognition/magnetoresistive pulse/IR/ultrasonic) to cover mechanical, pulse, and ultrasonic meters.

- Industrial-Grade Reliability

  IP68 rating and -40℃ to +85℃ operating range ensure stable performance in harsh environments.

# Technical Parameters

| Category | Item | Details |
|---|---|---|
| Mechanical & Environmental | Protection Rating | IP68 (submersible up to 1.5m depth) |
| | Operating Temperature | -40℃ ~ +85℃ |
| | Storage Temperature | -45℃ ~ +90℃ |
| | Housing Material | (UV)Flame-retardant ABS+PC, UV-resistant |
| Electrical | Power Supply | User-replaceable ER18505 Li-$SOCl_2$ battery |
| | Battery Life | ≥6 years (1 report/day; varies with frequency and network conditions) |
| | Standby Current | ≤ 10 μA (MCU deep sleep) |
| | Peak Current | ≤ 500 mA (during transmission) |
| Data Acquisition | Methods | Magnetoresistive/reed pulse, IR (ultrasonic meters) |
| | Reporting Interval | Remotely configurable (1 min ~ 24 hours, default: 24 hours) |
| | Data Storage | Local storage ≥366 days of daily data, supports offline transmission |
| Communication | Module Interface | Standard hot-pluggable port with anti-tamper design |
| | Supported Protocols | NB-IoT (B3/B5/B8...) |
| | | 4G Cat.1 |
| | | LoRaWAN |
| | | WMbus |
| | | Wi-SUN |
| | | via module replacement |
| | RX Sensitivity | NB-IoT: ≤-129 dBm |
| | | 4G Cat.1: ≤-100 dBm |
| | | LoRaWan:-138dBm@SF=12 |
| | | WMbus:-104dBm@100kbps |
| | | Wi-SUN:-110 dBm @ 50 kbps |
| | TX Power | 23 dBm ±2dB |
| | Data Success Rate | ≥ 99.9% (in stable network conditions) |
| Reliability & Lifespan | MTBF | ≥ 100,000 hours |
| | Mechanical Life | Battery compartment and latches withstand ≥500 insertions/cycles |
| | Module Plug Life | ≥ 100 cycles |



# Gas Meter

- FC-Radon Ultrasonic Gas Meter(G1.6-G6)
- FC-730 Ultrasonic Gas Meter(G6-G25)
- FC-722C-JME Ultrasonic Gas Metering Module(G1.6-G6)
- FC-730 Ultrasonic Gas Metering Module(G6-G40)
- NB-IoT Diaphragm Gas Meter(For Indonesia）

# FC-760-G4

## Friendcom-Radon Ultrasonic Gas Meter

## Overview

Product Introduction: Relying on its independently developed ultrasonic gas metering module, Friendcom has launched the G1.6–G6 full-electronic civil ultrasonic gas meter. Based on the ultrasonic time-difference principle, the product accurately measures flow by detecting the time difference of gas propagation in the forward and reverse directions. It excels in metering accuracy, turndown ratio, safety, intelligence, and temperature/pressure compensation. Moreover, with no mechanical wear and low maintenance costs, it further enhances product reliability and overall advantages.




## Product Advantages

| | |
|---|---|
| High Accuracy | Accuracy better than Class 1.5 |
| Wide Turndown Ratio | Wide range metering |
| High Sensitivity | Low starting flow rate, capable of detecting micro-flow leaks |
| Safety Protection | Real-time monitoring of abnormal flow and abnormal gas usage environment; upon detecting an anomaly, interlocking valve closure and active reporting are triggered |
| Modular Communication Design | Supports selection of mainstream communication modules such as NB-IoT, Cat.1, LoRaWAN, WM-Bus |
| Strong Anti-interference | No magnetically sensitive components, unaffected by magnetic fields |
| Additional Functions | Optional seismic/tilt sensor |
| | Optional NFC |
| | Optional SMA external antenna interface |

# Technical Parameters

| Parameter | G6-G40 | | | |
|---|---|---|---|---|
| Model | G1.6 | G 2.5 | G4 | G6 |
| Qmax m³/h | 2.5 | 4 | 6 | 10 |
| Qmin m³/h | 0.016 | 0.025 | 0.04 | 0.06 |
| Qt m³/h | 0.25 | 0.4 | 0.6 | 1.0 |
| Qr m³/h | 3.0 | 4.8 | 7.2 | 12 |
| Qs dm³/h | ≤3 | ≤4 | ≤5 | ≤8 |
| Measurement Level | Class 1.5 | | | |
| MPE | qmin≤q＜qt | | ±3% | |
| | qt≤q≤qmax | | ±1.5% | |
| | qt≤q≤qmax | | ≤0.5% | |
| Working Temperature | -25℃~55℃ | | | |
| Working Pressure | ≤30 kPa | | | |
| Temperature and Pressure Compensation | Support | | | |
| Combined Working Current | ≤ 40uA<br>(19 hours static + 4 hours constant flow + 1 hour pulsating flow) | | | |
| Working Power Supply | 1 battery 3,6V DC 19 Ah lithium for metrology circuit<br>1 battery 3,6V DC 19 Ah lithium for communication circuit | | | |
| Meter Life Cycle | More than 10 Years | | | |
| Explosion-Proof Grade | ATEX Zone 2-II 3G Ex ic IIA T3 Gc | | | |
| Communication Method | NB-IoT/ WMBus/LoRaWAN | | | |
| Comply With Standards | EN 14236-2018, EN 13757, UNI 11291, DLMS protocol | | | |

# Product Dimension

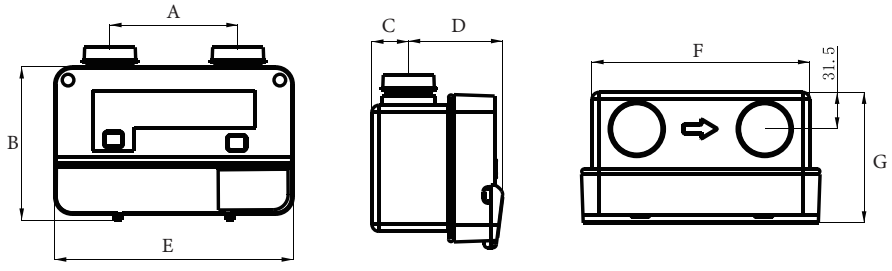


| G1.6-G4+ | | | | | | Unit: mm |
|---|---|---|---|---|---|---|
| A | B | C | D | E | F | G |
| 130 | 132 | 31.5 | 80.8 | 205 | 187 | 112.3 |

# FC-730
## Ultrasonic Gas Meter

## Overview

Relying on its independently developed ultrasonic gas metering module, Friendcom has launched the G6/G10 and G16/G25 full-electronic industrial/commercial ultrasonic gas meters. Based on the ultrasonic time-difference principle, the product accurately measures flow by detecting the time difference of gas propagation in the forward and reverse directions. It excels in metering accuracy, turndown ratio, safety, intelligence, and temperature/pressure compensation. Moreover, with no mechanical wear and low maintenance costs, it further enhances product reliability and overall advantages.




G6/G10




G16/G25

## Product Advantages

| | |
|---|---|
| High Accuracy | Accuracy better than Class 1.5 |
| Wide Turndown Ratio | Wide range metering |
| High Sensitivity | Low starting flow rate, capable of detecting micro-flow leaks |
| Safety Protection | Real-time monitoring of abnormal flow and abnormal gas usage environment; upon detecting an anomaly, interlocking valve closure and active reporting are triggered |
| Modular Communication Design | Supports selection of mainstream communication modules such as NB-IoT, Cat.1, LoRaWAN, WM-Bus |
| Strong Anti-interference | No magnetically sensitive components, unaffected by magnetic fields |
| Additional Functions | Optional seismic/tilt sensor |
| | Optional NFC |
| | Optional SMA external antenna interface |

# Technical Parameters

| Parameter | G6-G40 | | | | |
|---|---|---|---|---|---|
| Model | G6 | G10 | G16 | G25 | G40 |
| Qmax m³/h | 10 | 16 | 25 | 40 | 65 |
| Qmin m³/h | 0.06 | 0.1 | 0.16 | 0.25 | 0.4 |
| Qt m³/h | 1.0 | 1.6 | 2.5 | 4.0 | 6.5 |
| Qr m³/h | 12 | 19.2 | 30 | 48 | 78 |
| Qs dm³/h | ≤8 | ≤13 | ≤13 | ≤20 | ≤32 |
| Measurement Level | Class 1.5 | | | | |
| MPE | qmin≤q＜qt | | | ±3% | |
| | qt≤q≤qmax | | | ±1.5% | |
| | qt≤q≤qmax | | | ≤0.5% | |
| Working Temperature | -25℃~55℃ | | | | |
| Working Pressure | ≤50 kPa | | | | |
| Temperature and Pressure Compensation | Support | | | | |
| Combined Working Current | ≤ 40uA<br>(19 hours static + 4 hours constant flow + 1 hour pulsating flow) | | | | |
| Working Power Supply | 4 batteries 1,5V DC AA alkaline + 1 battery 3,6V DC lithium-thionyl chloride OR<br>2 batteries 3,6V DC lithium-thionyl chloride | | | | |
| Meter Life Cycle | More than 10 Years | | | | |
| Explosion-Proof Grade | ATEX Zone 2-II 3G Ex ic IIA T3 Gc | | | | |
| Communication Method | NB-IoT/ WMBus/LoRaWAN | | | | |
| Comply With Standards | EN 14236-2018, EN 13757, UNI 11291, DLMS protocol | | | | |

# Product Dimension

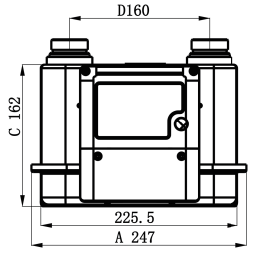


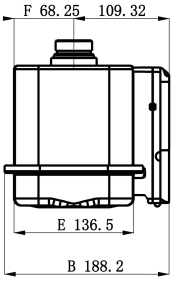


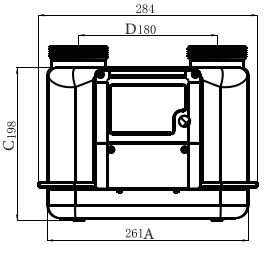


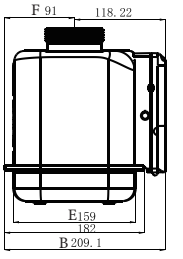


| G6-G10 | | | | | | G16/G25 | | | | | Unit: mm |
|---|---|---|---|---|---|---|---|---|---|---|---|
| A | B | C | D | E | F | A | B | C | D | E | F |
| 225.5 | 188.2 | 162 | 160 | 136.5 | 68.25 | 261 | 209.1 | 198 | 180 | 159 | 91 |

# FC-722C-JME

## Ultrasonic Gas Metering Module

## Overview

The FC-722C-JME series is a civil ultrasonic gas metering module completely independently developed by Friendcom based on a series of key technological breakthroughs. This product mainly covers the flow range of G1.6, G2.5, G4 and G6 ultrasonic gas meters, achieving stable metering throughout the entire lifecycle under different environments and gas qualities.



Solution 1



Solution 2

## Functional characteristics

| | |
|---|---|
| Wide range | G1.6–G6 full range coverage, turndown ratio up to 1:625 |
| Highly integrated solution (Option 1) | Covers all metering functions, realising the "module is the meter" design philosophy, reducing user development difficulty |
| Measurement separation scheme (Option 2) | Acts as a basic flow sensor, outputs accurate flow information; PIN TO PIN, plug-and-play replacement for imported modules |
| High accuracy | Accuracy better than Class 1.5 |
| High sensitivity | Low starting flow rate, capable of detecting micro-flow leaks |
| Wide temperature range | -25°C ~ 55°C |
| Temperature & pressure compensation | Equipped with integrated temperature & pressure sensor, supports real-time compensation |
| Self-diagnosis | Supports real-time alarm self-diagnosis |
| Easy installation | Small size, easy to install, supports vertical or L-shaped installation |

# Technical Parameters

| Parameter | G1.6-G6 | | | |
|---|---|---|---|---|
| Model | G1.6M | G 2.5M | G4M | G6M |
| Qmax m³/h | 2.5 | 4 | 6 | 10 |
| Qmin m³/h | 0.016 | 0.025 | 0.04 | 0.06 |
| Qt m³/h | 0.25 | 0.4 | 0.6 | 1.0 |
| Qr m³/h | 3.0 | 4.8 | 7.2 | 12 |
| Qs dm³/h | ≤3 | ≤4 | ≤5 | ≤8 |
| Measurement Level | Class 1.5 | | | |
| MPE | qmin≤q＜qt | | ±3% | |
| | qt≤q≤qmax | | ±1.5% | |
| | qt≤q≤qmax | | ≤0.5% | |
| Working Temperature | -25℃~55℃ | | | |
| Working Pressure | ≤50 kPa | | | |
| Temperature and Pressure Compensation | Support | | | |
| Combined Working Current | ≤ 30uA<br>(19 hours static + 4 hours constant flow + 1 hour pulsating flow) | | | |
| Power Supply | 3.0V-3.6V external power supply | | | |
| Interface | UART | | | |

# Product Advantages

| | |
|---|---|
| Accurate metering | Stable and reliable metering, strong adaptability to gas quality (supports up to 53% hydrogen blending) |
| Convenient to use | Modules fully calibrated and shipped from factory, significantly improving user meter calibration efficiency |
| High quality | Fully automated module production line ensures quality control and production capacity |
| High safety | Supports abnormal flow monitoring and analysis, ensuring gas safety |
| High cost-performance | Excellent cost-performance ratio while ensuring performance |
| Technical service | Provides timely and effective local technical service |

# Product Dimension

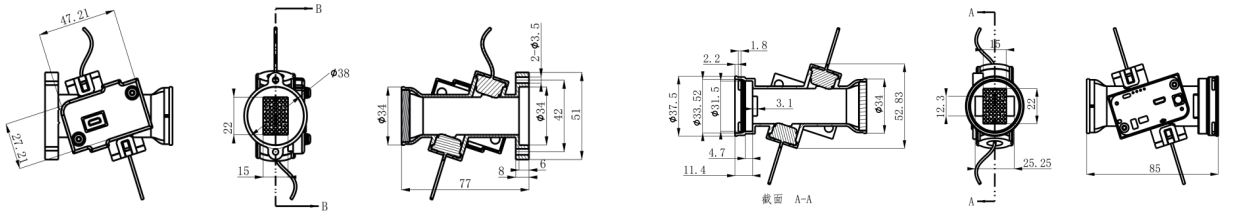


| Solution | Length | Width | Height | Cross-sectional Area | Connection Method |
|---|---|---|---|---|---|
| 1 | 77mm | 42mm | 51mm | 15×22=330mm² | Round hole screws |
| 2 | 85mm | 52.83mm | 37.5mm | 15×22=330mm² | Round hole screws |

# FC-730
## Ultrasonic Gas Metering Module

## Overview

The FC-730 series is an industrial/commercial ultrasonic gas metering module completely independently developed by Friendcom based on a series of key technological breakthroughs. This series mainly covers the flow range of G6, G10, G16, G25 and G40 ultrasonic gas meters, achieving stable metering throughout the entire lifecycle under different environments and gas qualities.




G6/G10




G16/G25



G40

## Functional characteristics

| | |
|---|---|
| Wide range | G6–G40 full range coverage, turndown ratio up to 1:625 |
| Highly integrated solution (Option 1) | Covers all metering functions, realising the "module is the meter" design philosophy, reducing user development difficulty |
| High accuracy | Accuracy better than Class 1.5 |
| High sensitivity | Low starting flow rate, capable of detecting micro-flow leaks |
| Wide temperature range | -25°C ~ 55°C |
| Temperature & pressure compensation | Equipped with integrated temperature & pressure sensor, supports real-time compensation |
| Self-diagnosis | Supports real-time alarm self-diagnosis |
| Easy installation | Small size, easy to install, supports vertical or L-shaped installation |

# Technical Parameters

| Parameter | G6-G40 | | | | |
|---|---|---|---|---|---|
| Model | G6M | G10M | G16M | G25M | G40M |
| Qmax m³/h | 10 | 16 | 25 | 40 | 65 |
| Qmin m³/h | 0.06 | 0.1 | 0.16 | 0.25 | 0.4 |
| Qt m³/h | 1.0 | 1.6 | 2.5 | 4.0 | 6.5 |
| Qr m³/h | 12 | 19.2 | 30 | 48 | 78 |
| Qs dm³/h | ≤8 | ≤13 | ≤13 | ≤20 | ≤32 |
| Measurement Level | Class 1.5 | | | | |
| MPE | qmin≤q＜qt | | ±3% | | |
| | qt≤q≤qmax | | ±1.5% | | |
| | qt≤q≤qmax | | ≤0.5% | | |
| Working Temperature | -25℃~55℃ | | | | |
| Working Pressure | ≤50 kPa | | | | |
| Temperature and Pressure Compensation | Support | | | | |
| Combined Working Current | ≤ 30uA<br>(19 hours static + 4 hours constant flow + 1 hour pulsating flow) | | | | |
| Power Supply | External power supply: 3.0V–3.6V | | | | |
| Interface | UART | | | | |

# Product Advantages

| | |
|---|---|
| Accurate metering | Stable and reliable metering, strong adaptability to gas quality (supports up to 53% hydrogen blending) |
| Convenient to use | Modules fully calibrated and shipped from factory, significantly improving user meter calibration efficiency |
| High quality | Fully automated module production line ensures quality control and production capacity |
| High safety | Supports abnormal flow monitoring and analysis, ensuring gas safety |
| High cost-performance | Excellent cost-performance ratio while ensuring performance |
| Technical service | Provides timely and effective local technical service |

# Product Dimension

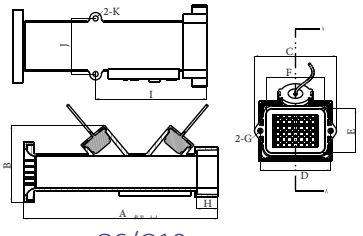

G6/G10

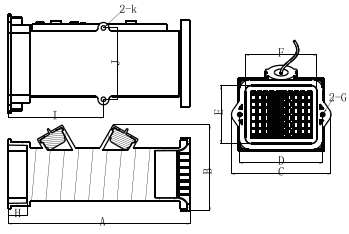

G16/G25

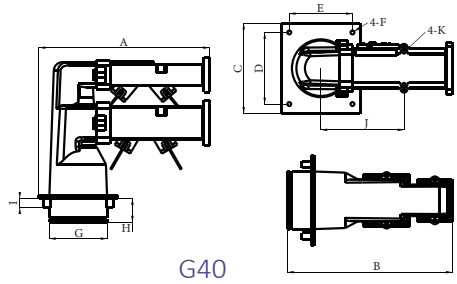

G40

Unit: mm

| Model | A | B | C | D | E | F | G | H | I | J | K |
|---|---|---|---|---|---|---|---|---|---|---|---|
| G6/G10 | 133 | 53 | 56 | 48 | 30 | 40 | Φ3.3 | 14.6 | 76 | 38 | Φ3.3 |
| G16/G25 | 133 | 63 | 70 | 60.5 | 42 | 52 | Φ3.3 | 14 | 69.5 | 52 | Φ3.3 |
| G40 | 200 | 193.4 | 106 | 84 | 74.07 | Φ4.5 | Φ67.8 | 27.9 | 10.8 | 97.5 | Φ3.3 |

# NB-IoT
## Diaphragm Gas Meter

## Overview

Relying on its independently developed ultrasonic gas metering module, Friendcom has launched the G6/G10 and G16/G25 full-electronic industrial/commercial ultrasonic gas meters. Based on the ultrasonic time-difference principle, the product accurately measures flow by detecting the time difference of gas propagation in the forward and reverse directions. It excels in metering accuracy, turndown ratio, safety, intelligence, and temperature/pressure compensation. Moreover, with no mechanical wear and low maintenance costs, it further enhances product reliability and overall advantages.




## Product Advantages

| | |
|---|---|
| Smart remote meter reading | No need for entry, automatic collection of gas usage data |
| Modular communication design | Supports selection of mainstream communication modules such as NB-IoT, Cat.1, LoRaWAN, WM-Bus |
| 24/7 safety protection | Real-time monitoring of gas meter operating status; instantly closes valve and actively reports any abnormality, ensuring gas safety |
| Remote intelligent control | Supports remote valve control and parameter configuration with permission levels, making management more flexible and secure |
| Low power consumption & long endurance | Lithium battery life ≥10 years; automatically reports low battery level, worry-free operation |
| Massive data storage | Continuously stores 1 year of daily usage and 80 days of hourly data; backend smart settlement; clear meter-side information display |
| All-round tamper protection | Automatically closes valve and triggers alarm under strong magnetic field, bypass, malicious activation, etc.; complete protection without blind spots |

# Technical Parameters

| Parameter | G1.6-G4 | | |
|---|---|---|---|
| Model | G1.6 | G2.5 | G4 |
| Max flow rate (qmax) m³/h | 2.5 | 4 | 6 |
| Min flow rate (qmin) m³/h | 0.016 | 0.025 | 0.04 |
| Starting flow rate m³/h | ≤3 | ≤5 | ≤5 |
| Total pressure loss Pa | ≤120 | ≤200 | ≤250 |
| Accuracy class | 1.5 | | |
| Maximum cumulative volume | 99999.999 (resets to 0 beyond range) | | |
| Operating pressure | ≤30 kPa | | |
| Total pressure loss (sealing test) | ≤250 Pa | | |
| Sealing | No leakage when 45 kPa pressure is applied | | |
| Explosion protection standard | EXib IIBT3 Gb | | |
| Base meter operating temperature | -10°C ~ 40°C | | |
| Medium conditions | Various fuel gases, air, non-corrosive gases | | |
| Base meter housing material | Aluminium | | |
| Power supply mode | Lithium battery type ER26500 | | |
| Operating voltage | DC 3.6 V lithium battery | | |
| Sampling method | Pulse (Hall) sampling | | |
| Valve control | Supports remote valve control with different permission levels (normal close, authorised close, authorised open) | | |
| Valve reliability | >10,000 consecutive switching cycles | | |
| Communication method | NB-IoT (compatible with China Telecom, China Mobile, China Unicom) | | |
| Monthly meter reading success rate | ≥99.9% | | |
| Service life | >10 years | | |

# Product Dimension

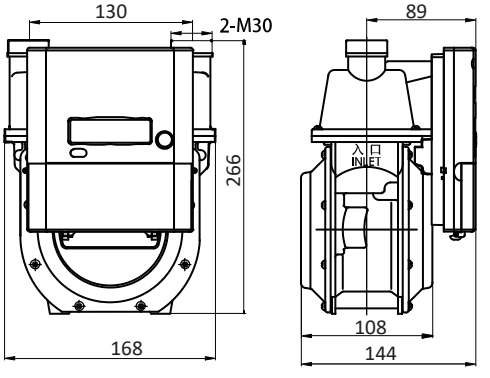


| | | | | | | Unit: mm |
|---|---|---|---|---|---|---|
| A | B | C | D | E | F | G |
| 168 | 266 | 144 | 130 | 108 | 89 | 2-M30 |



# Water Meter

- Cascade -Aeris Ultrasonic Water Meter(DN15-DN20)
- Cascade -CM Ultrasonic Water Meter(DN15-DN40)

# Cascade-CM
## Ultrasonic Water Meter

## Overview

The Friendcom Cascade-CM series ultrasonic water meter offers a turndown ratio up to R1000. It features IP68 protection rating, high resistance to water hammer shock and magnetic field interference, and a composite material body. Characterised by high measurement accuracy, ultra-low power consumption, and stable, reliable operation, the ultrasonic water meter supports wireless communication modules such as WM-Bus/LoRaWAN dual-mode and NB-IoT. It provides flow monitoring, forward/reverse metering, and intelligent alarm functions, adapting to diverse metering scenarios.



## Product Advantages

| | |
|---|---|
| No mechanical parts | Ultrasonic measurement, no moving mechanical parts, no wear |
| Long-term stability & accuracy | Maintains high stability and high accuracy during long-term operation |
| Modular communication design | Supports LoRaWAN and WM-Bus dual-mode communication; NB-IoT + WM-Bus dual-mode currently under development |
| Separate power supplies | Metering circuit and communication circuit are powered independently, no mutual interference |
| Wide turndown ratio | Maximum turndown ratio up to R1000 |
| Easy installation | Compact structure, easily installs in tight spaces |
| Ultra-long life | Battery life up to 20 years |
| Ultra-low starting flow | Starting flow rate as low as 1 litre/hour, accurately captures |
| Bidirectional measurement | Supports forward and reverse bidirectional flow measurement |
| Convenient maintenance | Standard NFC and infrared communication interfaces, easy on-site parameter setting and maintenance |
| Additional functions | Pressure sensor |
| | SMA interface for external antenna |

# Technical Parameters

| Parameter | DN15 | DN20 |
|---|---|---|
| Continuous Flow Rate Q3 ($m^3/h$) | 2.5 | 4 |
| Overload Flow Rate Q4 ($m^3/h$) | 3.125 | 5 |
| Transitional Flow Rate Q2 (l/h) | 4 | 6.4 |
| Minimum Flow Rate Q1 (l/h) | 2.5 | 4 |
| Starting Flow Rate(l/h) | 1 | 1 |
| Dynamic Range R (Q3/Q1) | R400/R500/R630/R800/R1000 | |
| Temperature Class | T30/T50 | |
| Sensitivity Level | U0D0 | |
| Maximum Display ($m^3$) | 999999.999 | |
| Environment Class | M1，E2 | |
| Installation Class | Outdoor or Indoor | |
| Maximum Permissible Error in the range Q2≤Q≤Q4 | ±2% （T≤30℃）<br>±3% （T>30℃） | |
| Maximum Permissible Error in the range Q1≤Q<Q2 | ±5% | |
| Battery | 1 battery 3,6V DC 8.5 Ah lithium for metrology circuit<br>1 battery 3,6V DC 8.5 Ah lithium for communication circuit | |
| RF | 868 MHz up to 10 mW E.R.P. | |
| Maximum Pressure (bar) | MAP16 | |
| Pressure Loss at Q3 (bar) | 0.25 | |
| Installation Orientation | H，V，H/V | |
| Protection Level | IP68 | |
| Water Meter Length (mm) | 110 | 130 |

# Product Dimension

| DN | Dimensions(mm) | | | | | |
|---|---|---|---|---|---|---|
| | L | L1 | H | A | W | h |
| DN15 | 110 | 81 | 75 | G3/4''B | 97 | 17 |
| DN20 | 130 | 81 | 75 | G1/B | 97 | 17 |

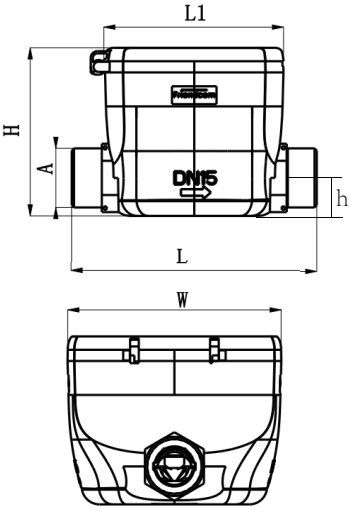

# Cascade -Aeris
## Ultrasonic Water Meter




Brass/Stainless Steel




Brass/Stainless Steel
(With Valve)

## Overview

The Friendcom Cascade-Aeris series ultrasonic water meter offers a turndown ratio up to R1000 and IP68 protection rating. It features strong resistance to water hammer and magnetic interference, with optional copper or stainless steel body to suit different installation environments.

Characterised by high accuracy, ultra-low power consumption, and stable operation, the water meter supports wireless communication modules such as WM-Bus/LoRaWAN dual-mode and NB-IoT. It provides flow monitoring, forward/reverse metering, and intelligent alarm functions, adapting to diverse metering scenarios.

## Product Advantages

| | |
|---|---|
| No mechanical parts | Ultrasonic measurement, no moving mechanical parts, no wear |
| Long-term stability & accuracy | Maintains high stability and high accuracy during long-term operation |
| Modular communication design | Supports LoRaWAN and WM-Bus dual-mode communication; NB-IoT + WM-Bus dual-mode currently under development |
| Separate power supplies | Metering circuit and communication circuit are powered independently, no mutual interference |
| Wide turndown ratio | Maximum turndown ratio up to R1000 |
| Easy installation | Compact structure, easily installs in tight spaces |
| Ultra-long life | Battery life up to 20 years |
| Ultra-low starting flow | Starting flow rate as low as 1 litre/hour, accurately captures |
| Bidirectional measurement | Supports forward and reverse bidirectional flow measurement |
| Convenient maintenance | Standard NFC and infrared communication interfaces, easy on-site parameter setting and maintenance |
| Additional functions | Pressure sensor |
| | SMA interface for external antenna |

# Technical Parameters

| Nominal Diameter | DN15 | DN20 | DN25 | DN32 | DN40 |
|---|---|---|---|---|---|
| Continuous Flow Rate Q3 ($m^3/h$) | 2.5 | 4 | 6.3 | 10 | 16 |
| Overload Flow Rate Q4 ($m^3/h$) | 3.125 | 5 | 7.875 | 12.5 | 20 |
| Transitional Flow Rate Q2 (l/h) | 4 | 6.4 | 10.08 | 16 | 32 |
| Minimum Flow Rate Q1 (l/h) | 2.5 | 4 | 6.3 | 10 | 20 |
| Starting Flow Rate (l/h) | 1 | 1 | 1 | 3 | 3 |
| Dynamic Range R (Q3/Q1) | R400/R500/R630/R800/R1000 | | | | |
| Temperature Class | T30/T50 | | | | |
| Sensitivity Level | U0D0 | | | | |
| Maximum Display ($m^3$) | 999999.999 | | | | |
| Environment Class | M1，E2 | | | | |
| Installation Class | Outdoor or Indoor | | | | |
| Maximum Permissible Error in the range Q2≤Q≤Q4 | ±2% （T≤30℃） | | | | |
| | ±3% （T>30℃） | | | | |
| Maximum Permissible Error in the range Q1≤Q<Q2 | ±5% | | | | |
| Battery | 1 battery 3,6V DC 8.5 Ah lithium for metrology circuit<br>1 battery 3,6V DC 8.5 Ah lithium for communication circuit | | | | |
| RF | 868 MHz up to 10 mW E.R.P. | | | | |
| Maximum Pressure (bar) | MAP16 | | | | |
| Pressure Loss at Q3 (bar) | 0.4 | | | | |
| Installation Orientation | H，V，H/V | | | | |
| Protection Level | IP68 | | | | |
| valve | Support | | | | |
| Material | Stainless Steel/Brass | | | | |
| Water Meter Length (mm) | 110/165 | 130/190 | 225/260 | 260 | 300 |

# Product Dimension

| DN | No Value | | | Dimensions(mm) | | |
|---|---|---|---|---|---|---|
| | L | L1 | H | A | W | h |
| DN15 | 110/165 | 94 | 117 | G3/4"B | 78 | 13.5 |
| DN20 | 130/190 | 94 | 121 | G1"B | 78 | 17.7 |
| DN25 | 225/260 | 94 | 130 | G5/4"B | 78 | 21.4 |
| DN32 | 260 | 94 | 141.5 | G3/2"B | 78 | 30.5 |
| DN40 | 300 | 94 | 145.8 | G2"B | 78 | 30.6 |

| DN | With Value | | | Dimensions(mm) | | |
|---|---|---|---|---|---|---|
| | L | L1 | H | A | W | h |
| DN15 | 165 | 94 | 117 | G3/4B | 78 | 13.5 |
| DN20 | 190 | 94 | 121 | G1B | 78 | 17.7 |

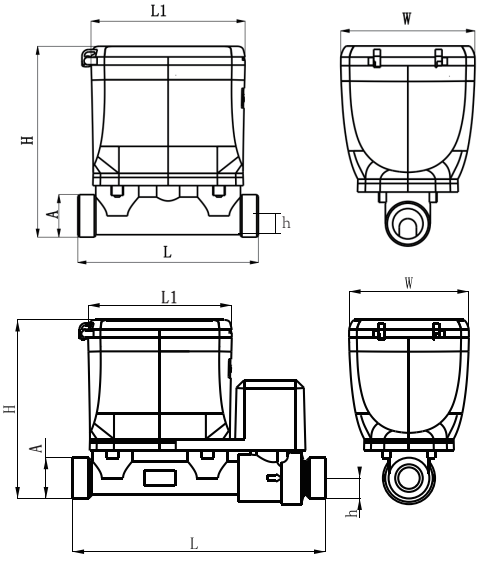



# EV-Boat Motor

▶ FCEV-10 Series

# EV-Boat Motor

## FCEV-10 Series




FCEV-10BM

## Overview

High-performance electric outboard motor designed formodernvessels with advanced technology that delivers high efficiency quietoperation,andenvironmentally friendly performance.

## Key Features

- High Efficiency Electric Motor: High performance with optimal efficiency.
- Ultra Low Noise Operation: Quiet operation for maximum comfort.
- Zero Emission Technology: Environmentally friendly with zero exhaust emissions.
- Fast Response Control: Fast response and precise control.
- Low Maintenance: Easy maintenance and lower operational costs.

## Excellent Design, Maximum Performance

**Motor Housing**
obust design, corrosion-resistant, and suitablefor marine environments.

**Control Unit**
Precise and responsive electronic control system.

**Tiller/Handle**
Ergonmictile seering system for comfortable and easy control.

**Cooling System**
Natural cooing system to maintain stableperformance during long operations.

**High Efficiency Propeller**
Speciallydesigned propeller for powerful thrust and high efficiency.

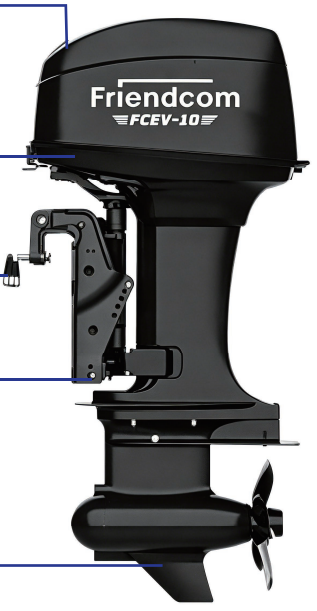


FCEV-10TM

## Technical Parameters

| Parameters | FCEV-10TM | FCEV-10BM |
|---|---|---|
| Rated Power | 9-12kW | 10-15 kW |
| Equivalent Gasoline Engine | 12-16 HP | 13-20 HP |
| Maximum Torque | 56 Nm | 70 Nm |
| Operating Voltage | 96 VDC | 96 VDC |
| Maximum Rotation Speed | 2.500 rpm | 3.550 rpm |
| Thrust Force | 1.022 N | 1.058 N |
| Acceleration 0-Max | 5 detik | 3 detik |
| Protection Rating | IP66 | |
| Motor Type | PMSM(Permanent Magnet Synchronous Motor) | |
| Cooling System | Natural Cooing | |
| Steering System | Tiller/ Handle | |
| Propeller | 3-Blade Aluminum | |
| Applications | Fishing Boats,Passenger Boats, Rubber Boats,Tourist Boats | |

## Main Features

### Performance
·High torque
·Fast acceleration
·Stable in various water conditions

### Energy System
·96 VDC voltage
·High energy eficiency
·Longer operating duration

### Acoustic Advantage
·Ultra-quiet operation
·Minimal vibration
·More comfortable riding experience

## Working System

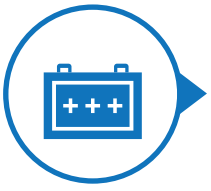
Battery(Lithium)

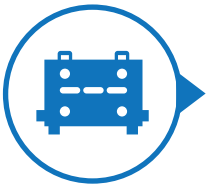
Controller

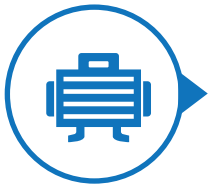
Motor


Propeller

## Applications


Fishing Boats


Passenger Boats


Rubber Boats



Tourist Boats

# CORPORATE CULTURE

## Mission
Enable Barrier-Free Connectivity for All Things

## Vision
To Be a Respected Invisible Champion in the Field Area Network (FAN) Industry

## Core Values
- Customer-Centricity
- Empowerment of Value Creators
- Integrity & Shared Success
- Continuous Self-Improvement

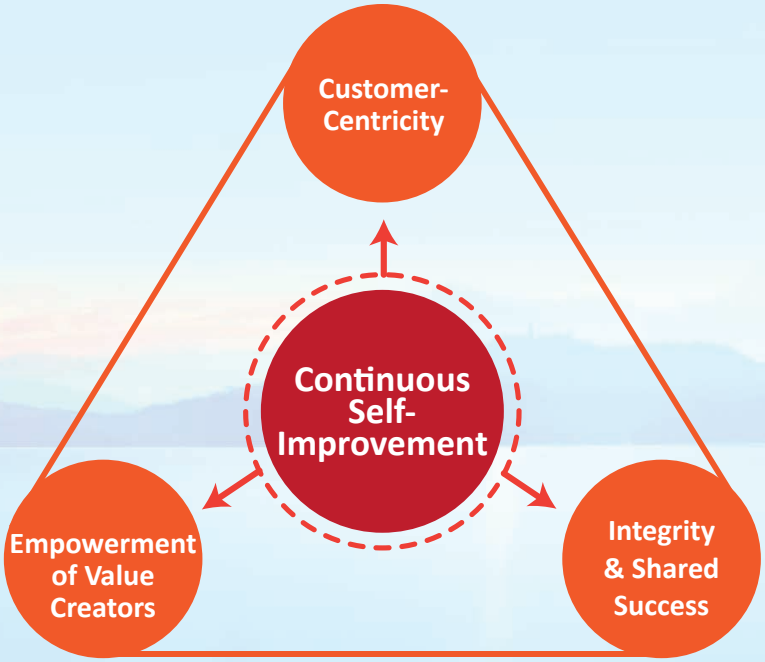

Official
WeChat Account

Official
Website

Friendcom

**Shenzhen Friendcom Technology Co.,Ltd.**


## Shenzhen Headquarters

Address: 3F,Building 6,Nanshan Ruiyuan,Longzhu 3rd Road,Nanshan District,Shenzhen City,Guangdong Province,China
Tel: 0755-8602 6600
Fax: 0755-8602 6300
Zip Code: 518100

## Dongguan Friendcom Technology Co.,Ltd

Address: Building 20, Jewelry Culture Industrial Park, Changping Town, Dongguan City, Guangdong Province, China
Tel: 0769-8600 8918
Fax: 0769-8600 1306
Zip code: 523560

## Wuhan Friendcom Technology Co.,Ltd

Address: No.20, Liufangyuan South Road, East Lake New Technology Development Zone, Wuhan, Hubei, China
Tel: 027-6349 2288
Fax: 027-6349 2288
Zip code: 430074