Friendcom

Friendcom Radon

Ultrasonic Gas Meter



Highlights Of Ultrasonic Gas Meter

- High stability & accuracy for long term measurement
- Battery lifetime ≥ 20 years
- Separate power supply circuits for metering & communication
- Supported communication protocol: LoRaWAN, WMBus and NB-IoT
- Temperature & pressure sensor for temperature and pressure compensation

Basic Features

- High accuracy better than Class 1.5
- High metrological sensitivity
- Full electronic without moving parts
- IP65
- Ultra-low power consumption
- Safety mechanism
- Maintenance free
- High degree of intelligence

Optional

- Seismic sensor for earthquake detection & automatic gas shut-off
- NFC supported
- SMA external antenna interface

Core Advantages

- **Excellent Gas Adaptability**
  The core algorithm supports diverse gas compositions in different environments (up to 53% hydrogen blending), ensuring high-precision metering under complex conditions.

- **High Reliability of Key Components**
  The self-developed transducer has high reliability and consistency, ensuring stable measurements throughout the product's lifecycle.

- **Adaptive Working Mode**
  The working modes can flexibly switch between high accuracy and low power consumption to meet different application scenarios. Intelligent algorithms dynamically adjust measurement frequency, extending battery life without compromising measurement accuracy.

- **Modular Communication Design**
  The data communication system adopts a modular architecture. It supports swappable installation of various mainstream communication modules. This design enables cost-efficient maintenance. Currently supported protocols include: LoRaWAN, WM-Bus, NB-IoT, NFC and Bluetooth etc.

Dimensions

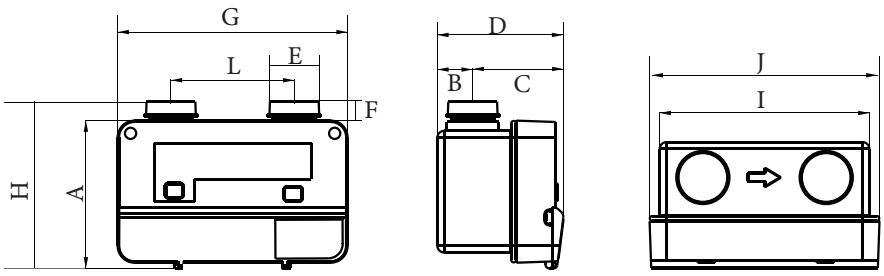

Dimensions(mm)										
L	A	B	C	D	E	F	G	H	I	J
110	132	31.5	80.8	112.3	G1-1/4	16	205	147.6	187	204.6
152.4	132	31.5	80.8	112.3	G7/8	20.7	205	152.4	217	234.6
160	132	31.5	80.8	112.3	G7/8	20.7	205	152.4	217	234.6

Technical Specifications

Model	G1.6	G2.5 (plus)	G4 (plus)	G6 (plus)
Qmax (m^3/h)	2.5	4	6	10
Qmin (m^3/h)	0.016	0.025 (0.016)	0.04 (0.016)	0.06 (0.016)
Qt (m^3/h)	0.25	0.4 (0.25)	0.6 (0.25)	1.0 (0.25)
Qr (m^3/h)	3	4.8	7.2	12
Qs (dm^3/h)	3	≤4 (≤3)	≤5 (≤3)	≤8 (≤3)
Accuracy Class	Better than Class 1.5			
MPE	Qmin ≤q<Qt, |MPE|≤3% Qt≤ q≤ Qmax, |MPE|≤1.5%			
Temperature & Pressure Compensation	Support			
Operation Temperature Range	-25℃~55℃			
Battery	1 battery 3,6V DC 19 Ah lithium for metrology circuit 1 battery 3,6V DC 19 Ah lithium for communication circuit			
ATEX	ATEX Zone 2-II 3G Ex ic IIA T3 Gc			
Standards	EN 14236-2018 / EN 13757 / UNI 11291 / DLMS protocol			

Friendcom
Shenzhen Friendcom Technology Co., Ltd.
Address: 3 Floor, Building 6, Guangqian Industrial Park, Xili, Nanshan District, Shenzhen, Guangdong Province, China
Tel: +86-755-8602 6600 Fax: +86-755-8602 6300

Download This Doc
www.friendcom.com

Friendcom

Friendcom FC-730- G6/G10

Ultrasonic Gas Meter



Highlights Of Ultrasonic Gas Meter

- High stability & accuracy for long term measurement
- Battery lifetime ≥ 20 years
- Separate power supply circuits for metering & communication
- Supported communication protocol: LoRaWAN, WMBus and NB-IoT
- Temperature & pressure sensor for temperature and pressure compensation

Basic Features

- High accuracy better than Class 1.5
- High metrological sensitivity
- Full electronic without moving parts
- IP54
- Ultra-low power consumption
- Safety mechanism
- Maintenance free
- High degree of intelligence

Optional

- Seismic sensor for earthquake detection & automatic gas shut-off
- NFC supported
- SMA external antenna interface

Core Advantages

- **Excellent Gas Adaptability**
  The core algorithm supports diverse gas compositions in different environments (up to 53% hydrogen blending), ensuring high-precision metering under complex conditions.
- **High Reliability of Key Components**
  The self-developed transducer has high reliability and consistency, ensuring stable measurements throughout the product's lifecycle.
- **Adaptive Working Mode**
  The working modes can flexibly switch between high accuracy and low power consumption to meet different application scenarios. Intelligent algorithms dynamically adjust measurement frequency, extending battery life without compromising measurement accuracy.
- **Modular Communication Design**
  The data communication system adopts a modular architecture. It supports swappable installation of various main-stream communication modules. This design enables cost-efficient maintenance. Currently supported protocols include: LoRaWAN, WM-Bus, NB-IoT, NFC and Bluetooth etc.

Dimensions

A	B
247mm	188.2mm
C	D
162mm	160mm
E	F
136.5mm	68.25mm

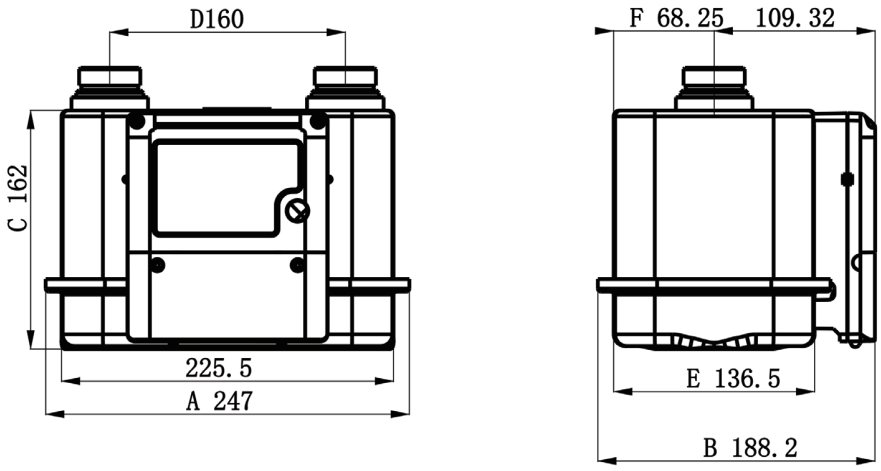

Technical Specifications

Item	Parameter	
Model	G6	G10 (Plus)
Qmax (m^3/h)	10	16
Qmin (m^3/h)	0.06	0.1 (0.06)
Qt (m^3/h)	1.0	1.6 (1.0)
Qr (m^3/h)	12	19.2
Qs (dm^3/h)	≤8	≤13 (≤8)
Measurement Level	Better than Class 1.5	
MPE	Qmin ≤q<Qt, |MPE|≤3% Qt≤ q≤ Qmax, |MPE|≤1.5%	
Temperature & Pressure Compensation	Support	
Operation Temperature Range	-25℃~55℃	
Battery	1 battery 3,6V DC 19 Ah lithium for metrology circuit 1 battery 3,6V DC 19 Ah lithium for communication circuit	
ATEX	ATEX Zone 2-II 3G Ex ic IIA T3 Gc	
Standards	EN 14236-2018 / EN 13757 / UNI 11291 / DLMS protocol	

Friendcom
Shenzhen Friendcom Technology Co., Ltd.
Address: 3 Floor, Building 6, Guangqian Industrial Park, Xili, Nanshan District, Shenzhen, Guangdong Province, China
Tel: +86-755-8602 6600 Fax: +86-755-8602 6300

Download This Doc
www.friendcom.com



Friendcom

Friendcom FC-730-G16/G25

Ultrasonic Gas Meter

Highlights Of Ultrasonic Gas Meter

- High stability & accuracy for long term measurement
- Battery lifetime ≥ 20 years
- Separate power supply circuits for metering & communication
- Supported communication protocol: LoRaWAN, WMBus and NB-IoT
- Temperature & pressure sensor for temperature and pressure compensation

Basic Features

- High accuracy better than Class 1.5
- High metrological sensitivity
- Full electronic without moving parts
- IP54
- Ultra-low power consumption
- Safety mechanism
- Maintenance free
- High degree of intelligence

Optional

- Seismic sensor for earthquake detection & automatic gas shut-off
- NFC supported
- SMA external antenna interface

Core Advantages

- **Excellent Gas Adaptability**
  The core algorithm supports diverse gas compositions in different environments (up to 53% hydrogen blending), ensuring high-precision metering under complex conditions.
- **High Reliability of Key Components**
  The self-developed transducer has high reliability and consistency, ensuring stable measurements throughout the product's lifecycle.
- **Adaptive Working Mode**
  The working modes can flexibly switch between high accuracy and low power consumption to meet different application scenarios. Intelligent algorithms dynamically adjust measurement frequency, extending battery life without compromising measurement accuracy.
- **Modular Communication Design**
  The data communication system adopts a modular architecture. It supports swappable installation of various mainstream communication modules. This design enables cost-efficient maintenance. Currently supported protocols include: LoRaWAN, WM-Bus, NB-IoT, NFC and Bluetooth etc.

Dimensions

A	B
284mm	209.1mm
C	D
198mm	180mm
E	F
159mm	91mm

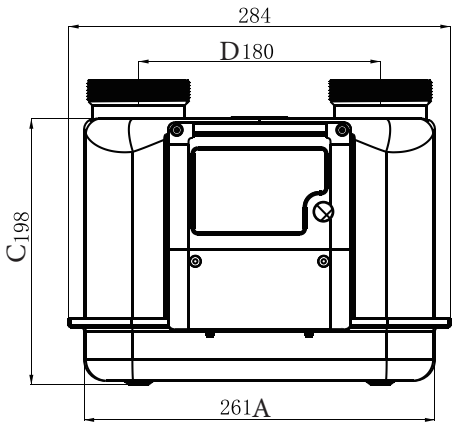

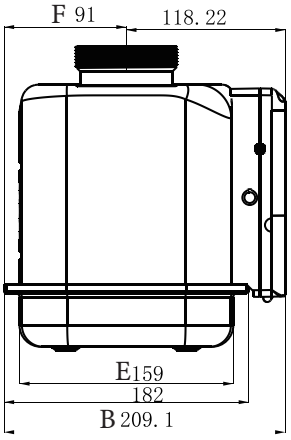

Technical Specifications

Item	Parameter	
Model	G16	G25 (Plus)
Qmax (m^3/h)	25	40
Qmin (m^3/h)	0.16	0.25 (0.16)
Qt (m^3/h)	2.5	1.6 (2.5)
Qr (m^3/h)	30	48
Qs (dm^3/h)	≤13	≤20 (≤13)
Measurement Level	Better than Class 1.5	
MPE	Qmin ≤q<Qt, |MPE|≤3% Qt≤ q≤ Qmax, |MPE|≤1.5%	
Temperature & Pressure Compensation	Support	
Operation Temperature Range	-25℃~55℃	
Battery	1 battery 3,6V DC 19 Ah lithium for metrology circuit 1 battery 3,6V DC 19 Ah lithium for communication circuit	
ATEX	ATEX Zone 2-II 3G Ex ic IIA T3 Gc	
Standards	EN 14236-2018 / EN 13757 / UNI 11291 / DLMS protocol	

Friendcom
Shenzhen Friendcom Technology Co., Ltd.
Address: 3 Floor, Building 6, Guangqian Industrial Park, Xili, Nanshan District, Shenzhen, Guangdong Province, China
Tel: +86-755-8602 6600 Fax: +86-755-8602 6300

Download This Doc
www.friendcom.com